fives north american

Flow Control Business Group

DOUBLE SHUTOFF VALVE

Bulletin 1595A

July 2004

Description

The 1595A Double Shut-off Valve combines two safety shut-off valves in one housing. This reduces piping costs and space requirements.

Application

The 1595A Double Shutoff Valve is recommended for industrial and commercial process heating and boiler applications that require two safety shutoff valves in series, with visual indication and FM valve seal overtravel proof-of-closure switch. They can be used with air, natural gas, propane and other non-corrosive gases.

Pre-packaged compact gastrain systems are easily created without additional piping by adding surface mounted devices such as high and low gas pressure swtiches, valve proving system or pressure regulator (see Bulletin 1597A).

Features

All valve components are designed and built to ISO 9001 standards to ensure safe, reliable operation.

- Two normally closed shutoff valves in one housing.
- Less than 1 second closing time.
- Slow-opening with adjustable initial flow.
- Adjustable main flow.
- Two actuators with independent valve operation.
- Standard visual position indicator on first valve.
- Standard valve seal overtravel FM proof-of-closure switch with visual indication on second valve.
- Test nipples downstream of each valve for a permanent and ready means to make tightness checks.
- Standard 23 mesh* strainer on the inlet of the valve body housing.
- Fast cycling operation.
- Maximum operating pressure 7 psi.
- Standard ½" to 2" NPT threaded flanges.

Capacity in cfh of natural gas at pressure drop of 1"wc sp. gr. = 0.65 at 60 F

Valve designation	Pipe size inches	Capacity in cfh
1595A-01	1/2	325
1595A-0	3/4	390
1595A-1	1	1260
1595A-2	1 1/4	1550
1595A-3	1 1/2	1700
1595A-4	2	1780

* System designer to determine if 23 mesh is sufficient for application.

Benefits

- Compact design saves installation space.
- Dual solenoids, integral flanges, and side taps reduce piping time and costs.
- When used with 1597A prepackaged fuel train, connecting pipes for surface-mount devices are eliminated.
- Slow-opening provides smoother light-off.
- Optimized internal contours provide a low pressure drop.
- Flow adjustment allows performance specific throttling.

Valve Proving Device

The Valve Proving Device option checks that both safety shutoff valves in a Compact Fuel Train are fully closed before a system startup and after shutdown when wired and interlocked with a suitable flame monitoring relay as shown in the wiring diagrams on Sheet 1597A-5. The Valve Proving Device will halt the start-up sequence to a burner if it detects an open safety shutoff valve, thus preventing ignition under dangerous conditions. For IRI requirements, the Valve Proving Device can be used in lieu of a vent line.

Approvals

UL listed
FM approved
NFPA 86-2003 compliant
IRI approvable (when ordered as 1595A-V with Valve Proving Device in lieu of Vent Line)
AGA ANSI Z21.21/CGA 6.5: "Commercial/Industrial Safety Shutoff Valves"

SPECIFICATIONS

Gases: air, natural gas, propane, other non-corrosive gases
Maximum Operating Pressure: 7 psi
Electrical Ratings: 110 to 120 V ac, 50-60 Hz (+10%/–15%)
Power Consumption: **1595A-01, -0:** 45 VA
1595A-1 thru -4: 90 VA
Ratings shown are total power consumption for both valves inclusive. Inrush and full load current have the same VA ratiing.
Electrical Enclosure: NEMA 12
Electrical Connection: DIN-Connector with 18" lead wires and with $^1/_2$" NPT conduit DIN-Connector
Duty Cycle: 100%
Ambient / Fluid Temperature: –40 F to +150 F
Classification Valve V1: Safety Shutoff Valve: UL 429, FM 7411, CSA certified, ANSI Z21.21,
Classification Valve V2: Safety Shutoff Valve: UL 429, FM 7411, CSA certified, ANSI Z21.21,
Closing Time: <1 second
Opening: V1 <1 second, V2 1-20 seconds (adjustable) at 70 F
Initial Lift Adjustment: Adjustable on V2: 0 to 70% of total flow
Main Flow adjustment: Adjustable on V2: 10 to 100% of total flow

Materials in Contact with Gas:
Housing: Aluminum, Steel
Seals on valve seats: NBR-based rubber
Mounting Position: Can be installed in vertical through horizontal position. Do not mount upside down (coil can not be below valve).
Strainer: 23 mesh, installed on the housing upstream of V1
Test Port: G 1/8 ISO 228 taps available on both sides upstream of V1, between V1 and V2, downstream of V2, and on both flanges (G 1/8 test nipples supplied).
Position Indication: Visual indicator standard on V1
Proof-of-Closure Switch: FM overtravel, SPDT switch with open and closed indication lamps standard on V2.
AC max. 10 A resistive at 120 V ac
AC max. 8 A inductive at 120 V ac

DIMENSIONS

inches

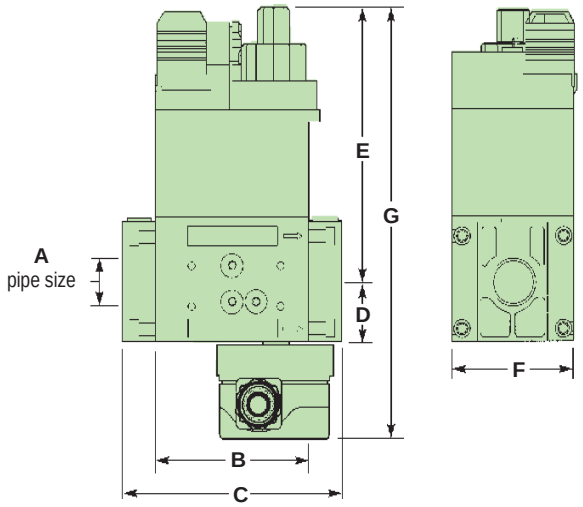

Valve designation	A	B	C	D	E	F	G	Wt, lb
	dimensions in inches							
1595A-01	$^1/_2$	$3^{11}/_{16}$	$5^5/_8$	$1^3/_8$	$5^7/_8$	$2^7/_8$	$10^5/_{16}$	4.8
1595A-0	$^3/_4$	$3^{11}/_{16}$	$5^5/_8$	$1^3/_8$	$5^7/_8$	$2^7/_8$	$10^5/_{16}$	4.8
1595A-1	1	$4^7/_8$	$6^7/_8$	$1^{13}/_{16}$	$8^5/_8$	$3^7/_8$	$13^1/_8$	4.8
1595A-2	$1^1/_4$	$4^7/_8$	$6^7/_8$	$1^{13}/_{16}$	$8^5/_8$	$3^7/_8$	$13^1/_8$	12.3
1595A-3	$1^1/_2$	$4^7/_8$	$8^1/_8$	$1^{13}/_{16}$	$8^5/_8$	$3^7/_8$	$13^1/_8$	12.3
1595A-4	2	$4^7/_8$	$8^1/_8$	$1^{13}/_{16}$	$8^5/_8$	$3^7/_8$	$13^1/_8$	12.3

ORDERING INFORMATION

1595A - 1 - V

Product Number
Pipe Size
Valve Proving Device (optional)

DIMENSIONS SHOWN ARE SUBJECT TO CHANGE. PLEASE OBTAIN CERTIFIED PRINTS FROM FIVES NORTH AMERICAN COMBUSTION, INC. IF SPACE LIMITATIONS OR OTHER CONSIDERATIONS MAKE EXACT DIMENSION(S) CRITICAL.

WARNING: Situations dangerous to personnel and property may exist with the operation and maintenance of an combustion equipment.The presence of fuels, oxidants, hot and cold combustion products, hot surfaces, electrical power in control and ignition circuits, etc.,are inherent with any combustion application. Parts of this product may exceed 160F in operation and present a contact hazard. Fives North American urges compliance with National Safety Standards and insurance Underwriters recommendations, and care in operation.

Fives North Amercian Combustion, Inc., 4455 East 71st Street, Cleveland, OH 44105 USA, Phone 216.271.6000
Fax 216.641.7852 email: fna.sales@fivesgroup.com • www.fivesgroup.com/fivesna

Printed in USA
FNA 7-04-B1595A